ORBIS energía inteligente®

ERL® UK Distributor of ORBIS products

D2221

Single Phase Digital Energy Meter

Consumption control in machinery and facilities

Features:

- Single-phase digital meter with two width modules
- Direct measurement 10 (22) A
- Backlit LCD display for viewing even in the dark
- Partial counter with reset
- Totalizer counter: 6 digits + 1 decimal
- Partial counter with reset: 4 digits + 1 decimal
- Power and consumption indicator LEDs

Order Details:

Product Code
D2221

Wiring Diagram:

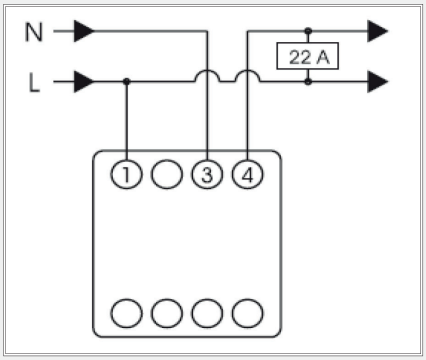

Dimensions:

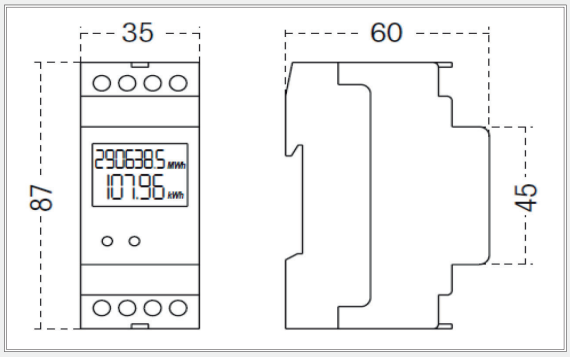

Technical Support
01923 220 277
technical@electroreplacement.com

Sales
01923 255 344
sales@electroreplacement.com

www.electroreplacement.com

D2221 Continued...

TECHNICAL DATA	D2221
Reference Voltage (Un)	230 V ac
Voltage variation	-15% ... + 10%
Operating minimum voltage (U min)	195 Vac
Nominal frequency	50 - 60 Hz
Frequency variation	± 2 %
Transformation ratio	-
Measurement category	CAT III (EN 61010-1)
Power consumption voltage circuits	< 2.5 VA
Power consumption current circuits	< 2.5 VA
Active	
Active class index	2 (according to EN 62053-21)
Constant	100 imp/kWh
Starting current (cos ϕ = 1)	25 mA
Minimum current	500 mA
Reference current	10 A
Maximum current	22.5 A
LCD technology	LCD, TN with backlit
Environmental	
Specified operating temperature range	-10 ... +45 ºC
Storage temperature range	-20 ... +60 ºC
Relative humidity	10 ...90 % non condensing
Assigned contamination degree	3 (according to EN 61010-1)
Mechanical	
Protection class	Class II in correct mounting conditions
Degree of protection	IP 20 / IP51 on the front according to EN 60529
Electrical connections	
Connection type	Direct through screw terminals
Wire cross-section range	1 ... 6 mm2
Maximum screw tightening torque	0.8 Nm
Dimensions	
DIN modules	2
Net weight	185 g